209 TRI-PLY SERIES
211 TRI-PLY SERIES

ROUND BORE

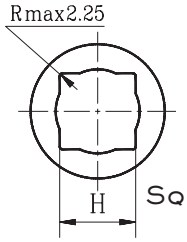

SQUARE BORE

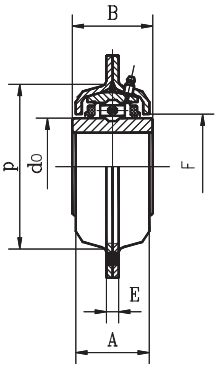

TYPE 1

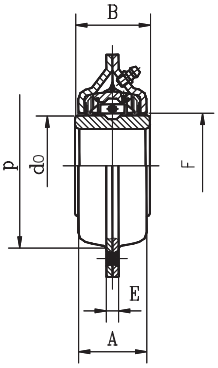

TYPE 2

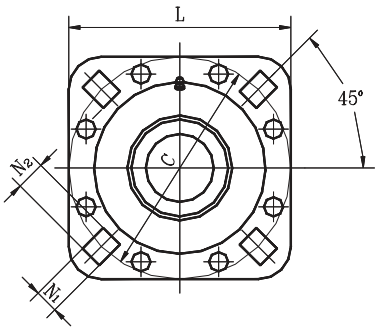

Unit No.	TYPE	Bearing Bore Size (in) (mm)		Dimensions (in) (mm)										
		H (SQ)	d (RD)	L	P	B	A	F	do	E	C	N(N1XN2)	Basic Dynamic Load Rating (LB)	Basic Static Load Rating (LB)
ST491A	1	--	1-25/32 45	5 127	3-7/8 98	1-11/16 42.8	1-21/32 42	2-3/8 60	2-17/64 57.547	9/32 7	5 127	17/32 13.5	7160	3934
DHU45R-209	1	--					1-21/32 42					17/32 X 43/64 13.5 X 16.7		
ST491B	1	--	1-17/32 38.86											
ST209-1 1/8	1	1-3/16 29.927	--				1-21/32 42					17/32 X 43/64 13.5 X 16.7		
ST209-1 1/8-I	2		--				1-15/32 37							

HRBN 哈宁传动 HRBNBEARINGS

南京哈宁轴承制造有限公司
电话：025-52217447、86629730
传真：025-52300551
网址：http://www.8767.com

Unit No.	TYPE	Bearing Bore Size (in) (mm)		Dimensions (in) (mm)										
		H (SQ)	d (RD)	L	P	B	A	F	do	E	C	N(N1XN2)	Basic Dynamic Load Rating (LB)	Basic Static Load Rating (LB)
DHU55R-211	1	--	2-11/64 55	5-1/2 139.7	4-15/32 113.5	2 51	1-53/64 46.4	2-7/8 73	2-23/32 69	23/64 9	5-1/2 139.7	17/32 X 19/32 13.5 X 15.1	9790	5620
DHU55R-211-1	2	--					1-15/32 37	2-51/64 71		5/16 8				
ST211-1 3/4	1	--	1-25/32 45.212			2-3/16 55.5		2-7/8 73		23/64 9		17/32 13.5		
ST211-2 3/16	1	--	2-13/64 55.575				1-21/32 42							
ST211-2 3/16-I	2	--						2-51/64 71		5/16 8				
DHU40S-211	1	1-39/64 40.878	--			2 51	1-15/32 37	2-7/8 73		23/64 9		17/32 X 19/32 13.5 X 15.1		
FD211-1 1/2	1	1-17/32 38.89	--					2-51/64 71		5/16 8				